orlański

natural warmth of the house

INSTRUCTION MANUAL & SERVICE MANUAL

ORLIGNO 200

INSTRUCTION MANUAL
Content

1. Boiler application 3
2. Principle of work 3
3. Description of the controller 4
    3.1. Front panel of EKOSTER 2 4
    3.2. Main functions of EKOSTER 2 4
4. Gasification process. 7
5. Boiler start-up 8
    5.1. Lightning up 8
    5.2. Fuel stoking 8
    5.3. Boiler turning off 9
    5.4. Optimal boiler's temperature 9
    5.5. Power outage and pump failure. 9
6. Maintenance 10
    6.1. Boiler maintenance 10
    6.2. Boiler cleaning 10
    6.3. Boiler tightness 11
    6.4. Fan maintenance 11

1. Boiler application

Orlanski's gasification boilers are designed to burn wood. As a main fuel it is recommended to use wood logs with moisture content 15-25% and max. length 5 cm shorter than loading chamber depth depending on boiler size; wood log diameter: 15-25 cm.

ATTENTION!
Using fuel different than the recommended not guarantees optimum boiler operation and achieving parameters featured in technical data. It can also affect durability of the boiler and its components.

ATTENTION!
Using fuel different than the recommended is treated as wrong boiler operation and resultant performance irregularities cannot be reason for complaint.

ATTENTION!
Boiler is equipped with controller that enables to operate in right temperature's range and protects the boiler against overheating by fan activation.

2. Principle of work

Gasification boilers utilize process of dry, pyrolitic wood distillation. During wood burning with limited amount of air, wood changes into charcoal. Gasification process creates large amount of wood gases which are directed to ceramic nozzle and burned in flame form in bottom chamber. This method of wood burning efficiently make use of wood as a fuel.

3. Description of the controller

3.1. Front panel of EKOSTER 2

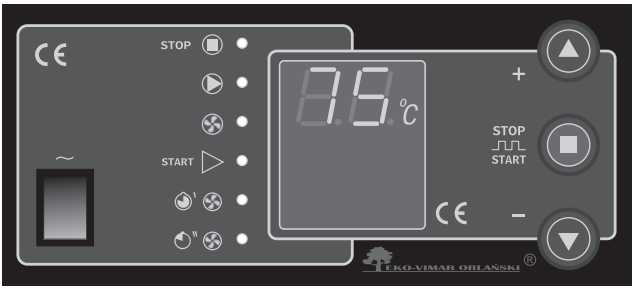

STOP STOP

PUMP'S OPERATION

FAN'S OPERATION

START FIRING-UP MODE

BLOW-THROUGH - INTERNAL TIME

BLOW-THROUGH - OPERATING TIME

POWER SWITCH

Pic.1 *Controller's description.*

3.2. Main functions of EKOSTER 2

Application

The microprocessor temperature's controller for central heating boiler is designed to control the air blow in wood-fired boiler and to actuate circulating pump in central heating systems.

Controller performs the following functions:

- maintaining set temperature of boiler by controlling air blow,
- smooth start-up of a blower,
- setting the blower power (service mode),
- programmable boiler „blow-through",
- automatic control switch-off after boiler burnout (extinguish),
- blower interlocking when feeding the boiler,
- control of central heating circulating pump depending on its set operating temperature,
- „COMFORT SYSTEM" mode,
- protection against freezing or overheating of boiler,
- signalling of temperature sensor's damage,
- regulating the brightness of display - increased during readout and change of regulator settings,
- room thermostat cooperation,
- automatic turning off in case of wrong burning up in the boiler,
- EKOSTER CONTROL co-operation.

Operation description

After switching on, controller is in **STOP**, , which is signaled by adequate diode. Operation starts after pressing or automatically, when boiler's temperature increases above operating threshold – temperature difference between set temperature and DT parameter set in the service menu. Status **STOP** is automatically activated after 30 minutes since temperature decrease below operating threshold. CONTROL socket which is located at the back panel of the controller is for connection of remote control EKOSTER CONTROL.

Buttons and służą do zmiany nastaw. During boiler operation, pressing or causes possibility to change desired boiler's temperature. Pressing and withholding button causes increase of speed of temperature changing

Pressing button causes:

- temperature below operating threshold:turning on/off of the controller signaled with diodes **START** or **STOP**,
- at temperature above operating threshold:fan operation blockade signaled by blinking , diode, which makes possible to stoke the boiler. Return to automatic operation after pressing button.

ATTENTION!
Displaying „Er" on the controller informs about temperature increase above 99 °C, below -9 °C or boiler sensor damage. To secure the boiler till sensor replacement, pump will be automatically activated.

COMFORT SYSTEM

COMFORT SYSTEM function in controller prevents pump's rotor from stone deposition. Controller automatically activates pump after heating season for 30 seconds every 14 days.

Pump operation in this mode is signaled with flashing **POMPA** diode. Function activates after 1 minute since controller's activation. Pump activation in this mode causes that 14 days period is counted at the beginning.

Freezing and overheating function

Controller enables to turn on circulation pump In case if temperature drops to 4 °C or lower. Exceeding 97°C causes fan to turn off and circulation pump activation. Boiler overheating is signaled with flashing **STOP** diode. In such a case it is recommended to determine cause of overheating, eliminate and turn on the boiler pressing button. Pump is activated permanently In case of boiler sensor damage.

Blow-through

- Press and hold for 3 s till diode starts blinking,
- przyciskami , are for blow-through time setting in seconds,
- Press dtill diode starts blinking,
- With buttons , set blow- through pause in minutes,
- Press .

From now on controller at temperatures higher than set one will activate blow-through.

ATTENTION!
- Setting blow-through on „0" will deactivate blow-through,,
- Above 98 °C blow-through is turned off not to overheat the boiler.

Remote control

Controller is adjusted to install remote control „EKOSTER CONTROL" that enables to control and change the boiler's temperature, displays of pump condition and mode START-STOP, at the same time remote control can activate alarm in case of temperature sudden increase to alarming level.

Remote control with 10 or 15 meters cable is an accessory appliance.

Service mode

Service mode is for settings changes. To enter service mode:

- turn off controller,
- turn on and during controller's software displaying (ex. 3.4) press and hold button until parameter "HI" will display.

Controller displays in turn symbol and its value. , buttons enables to change current parameter value and button is for moving on to next parameter:

Parameter order:

- „HI" temperature's hysteresis (setting range: 2 – 9 °C) how much temperature must fall from set temperature to turn the fan on.
- „Po" temperature of pump activation - preset 65°C (setting range: 65-90°C), after room thermostat connection, change temperature below 65°C, till „rP" parameter appears on display– Ekoster based on signal from room thermostat will automatically control pump's operation.
- „DT" temperature's difference from operation threshold: at what temperature's difference controller will enter **STOP** or **START** status (setting range: 10-30°C) for example DT=20, set temperature = 70°C, after falling below 50°C

(temperature decreased below DT parameter) controller will wait 30 minutes and will turn off fan signaling it with **STOP** diode.

- „ ": fan power in percentages (3: 30% - 10:100%)

ATTENTION!
It is recommended to set DT=20 HI=2°C and boiler's temperature 90°C for connection with accumulation tank.

4. Gasification process

Gasification boilers must operate in specified conditions.

Optimal boiler's temperature is 85 - 90 °C. At lower temperatures gasification process is not running correctly – boiler cannot reach nominal power and fuel usage is relatively higher. Wood drying in loading chamber is crucial stage in gasification process – at lower temperatures boiler cannot reach right temperature and gasification process is disturbed. Main source of heat in Orlan boilers is gas flame created during gasification process, if main conditions won't be met for proper gasification process, amount and quality of flame will be inadequate.

Essential factor influencing right gasification process is quality, moisture content and type of burned wood. The best is hardwood (beech, oak, harnbeam) with moisture content 15-20%. Usage other types of wood like spruce is acceptable, however heat exchanger pollution will increase and time between boiler stoking will decrease. In order to determine proper moisture content it is recommended to use moisture meter (pic. 3)

Appropriate wood assures correct boiler operation. Usage of wood with different parameters other than recommended will affect proper work of boiler.

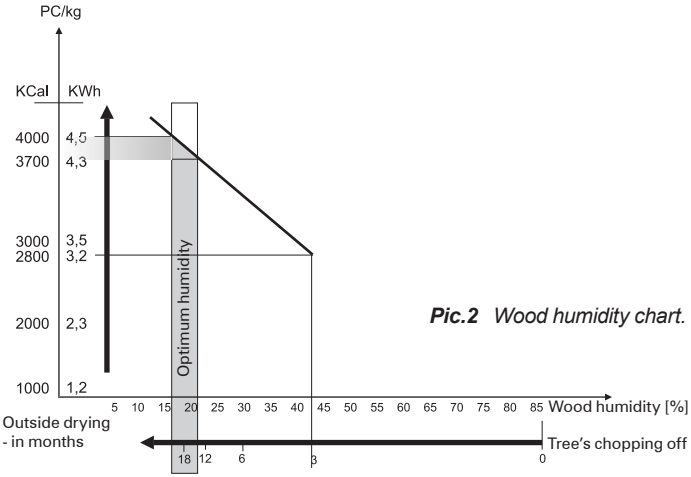

Pic.2 *Wood humidity chart.*

Pic.3 *Moisture meter*

5. Boiler start-up

Before boiler start-up it is advisable to check tightness of screw connections (leakages), level of water in installation and properly set controller's parameters.

5.1. Lightning up

In order to light up in the boiler:

1. Turn off controller.
2. Push in the chimney flap (combustion duct open).
3. Open upper door.
4. Put the paper, small pieces of wood and wood logs directly on the nozzle.
5. Light the paper and close the upper door.
6. Half-open bottom door to ensure natural draft.
7. Wait 15-20 minutes to create ember layer (should be at least 10 cm of ember layer covering whole loading chamber).
8. Fully load the boiler with wood; put the wood logs along the loading chamber.
9. Close hermetically upper and bottom door.
10. Pull chimney flap rod (chimney flap closed) and turn the fan on.

ATTENTION!
It is forbidden to turn the fan on with opened upper door.

ATTENTION!
Take into consideration loading chamber depth while stoking the boiler. Wood dimensions larger than recommended may cause troubles during closing the upper door. It is necessary to avoid closing upper door with force – it may damage the door.

ATTENTION!
Acceptable wood humidity of 25% is reached after 12 months of drying.
Recommended level of 15-20% is reached after 24 months of seasoning (Pic. 2)

5.2. Fuel stoking.

Burning period in Orlan boilers is 7-12 hours. In order to avoid discomfort with fuel stoking it is recommended to check fuel level each 5-7 hours. To check fuel level and possibly stoke the boiler one should:

1. Turn off the controller.
2. Open the chimney flap.
3. Open upper door and start stoking fuel.
4. Close upper door, chimney flap and turn on the controller.

Keep in mind that during the fuel stoking some wood parts may get between flue flange and chimney flap which would make impossible to close the flap tightly.

During fuel stoking (it is recommended to stoke the fuel after wood fully burned till glow layer) stir with poker ash deposited on the sides of loading chamber.

ATTENTION!
Lack of fuel in the boiler is signaled with **STOP** ◉ diode.

5.3. Boiler turning off.

To turn off the boiler press main switch on the controller or automatically in case of lack of fuel.

5.4. Optimal boiler's temperature.

Main factor assuring trouble-free boiler operation is to keep right boiler's temperature.

Proper wood gasification process is assured when boiler's temperature is at least 85°C.

During big demand for heat it is possible that return water temperature will decrease. If return water temperature will be more than 20°C lower than hot water from the boiler, loading chamber may partially be cooled, that leads to drop in gasification efficiency. As a result pitch deposits on the sides of boiler in larger amounts. To avoid this issue, boiler installation should have small water circulation. This can be achieved through 4 way valve installation (or 3 way valve with accumulation tank) on the hot water outlet. Four way valve works on principle of hot water mixing with return water from heating installation. Right setting of hot and return water streams flowing through the valve, ensures that return water to the boiler is high enough not to drastically lower temperature in gasification chamber – in this way gasification process proceeds correctly. Temperature's difference 15-20°C does not strain boiler body, consequently prolonging boiler lifespan.

5.5. Power outage and pump failure.

During boiler operation power outage or pump failure may happen. If failure occurs during heating season, it is necessary to stop stoking the boiler. It is forbidden to run the boiler with opened chimney flap. Boiler operation on full draft results in its uncontrolled work that may lead to boiler's overheating.

In case of boiler installation in forced circulation, power outage causes fan and pump turning off. Poor heat collection from heating installation (radiators) may also leads to boiler's overheating.

W celu uniknięcia problemu przegrzania kotła zalecane jest zainstalowanie dodatkowego odbiornika ciepła w postaci podgrzewacza wody użytkowej.

In order to avoid boiler overheating it is recommended to install additional heat collector ex. water heater, which ensures minimal power output collection ex. 5kW for boiler 25 kW. Thanks to that boiler overheating is avoided.

ATTENTION!
In order to secure boiler and electric installation against sudden rise of voltage in the grid, it is recommended to use surge protectors like power strips.

6. Maintenance

6.1. Boiler maintenance.

Boiler needs to be serviced for idle time (summer season, absence of user).

Sides of loading, ash chamber, chimney flap and heat exchanger needs to be cleaned regularly (it is advisable to burn softwood like spruce to remove pitch before summer season). After burning softwood leave the boiler open – in this way damp is not condensing on the sides of boiler.

ATTENTION!
It is advisable to control the boiler annually in order to prepare it well for the next heating season.

6.2. Fan's conservation

Ash created during wood burning falls down through the nozzle to ash chamber, that's why it is advisable to remove the ash from bottom chamber. Each time before lightning up the boiler it is recommended to clean loading chamber. Ash needs to be removed through the nozzle. Use the tools supplied with the boiler.

Pitch is created during gasification process. Amount of created pitch depends on wood type, humidity and water temperature coming out and into the boiler. It is recommended to clean loading chamber at least once a month.

Particles in exhaust gases flowing through the heat exchanger create on their surface deposit. Deposition causes lowering of inner pipes dimension and lowering of heat exchange surface. That is why it is necessary to clean heat exchanger pipes each time after boiler stoking with cleaning mechanism lever.

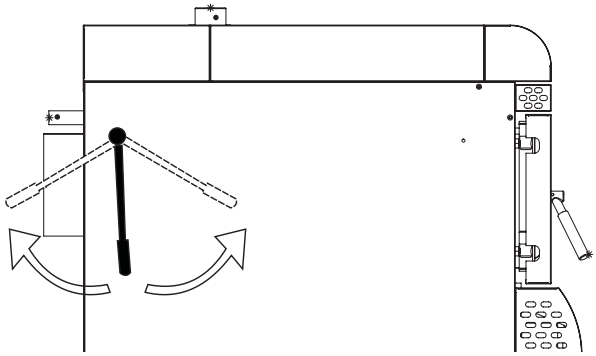

ATTENTION!
It is necessary to use clearing mechanism lever each time after stoking the boiler, otherwise pitch may clogged turbulators.

ATTENTION!
To avoid accumulation of ash in bottom chamber especially at the back side below heat exchanger pipes, it is necessary to remove the ash with boiler tools.

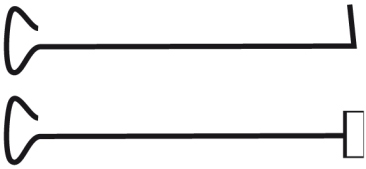

Pic.4 *Boiler tools.*

6.3. Boiler tightness.

It is important to assure boiler tightness, mostly door tightness. Leaks cause that exhaust gases escape to boiler room but most importantly it may leads to uncontrolled burning in the boiler. To assure door tightness, silicone rope of upper door needs to be controlled and in case of damage of silicone coat – replaced. Rope in bottom door must be greased (at least once a month) with oil or graphite grease.

To adjust boiler door one should
a) Remove the door
b) Loosen screw
c) Rotate both hinges 360°
d) Screw up the nut.

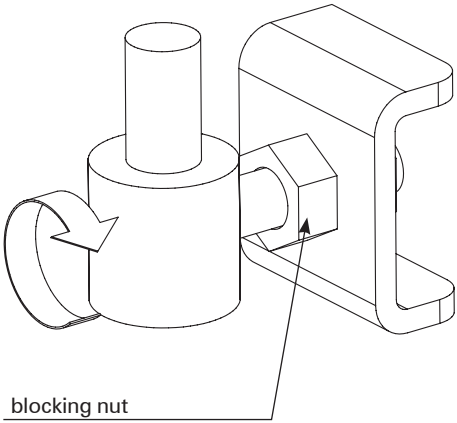

ATTENTION!
Door adjustment needs to be done on both hinges!

6.4. Fan maintenance.

It is important to keep the fan cleaned. Keeping the fan blades cleaned directly influences boiler and pump lifespan. It is recommended to take off front fan cover to remove ash that may leads to fan power decrease and may damage the fan. It is acceptable to clean the fan blades with brush with soft bristle.

SERVICE MANUAL
Contents

1. Installation 13
    1.1. Boiler-room ventilation 14
    1.2. Supply air ventilation 14
    1.3. Exhaust ventilation 14
    1.4. Chimney connection 14
2. Technical data 15
    2.1. EKOSTER 2- technical data 15
    2.2. EKOSTER 2 – installation recommendations 15
    2.3. EKOSTER 2 – electric scheme 17
    2.4. Boiler dimensions 18
    2.5. Technical data of the boiler 18
3. Connection of the boiler 20
    3.1. Accumulation 20
    3.2. Boiler thermal protection 21
4. Troubleshooting 22
5. Ending 23

1. Installation

Boilers should be installed according to binding rules and norms. The requirements of norm PN 87/B 02411 according building of solid fuel boiler room, norm PN 91/B 02413 according open system boilers' production and norm PN-B-02414:1999 according to safety appliances in pressurized systems should be taken into account.

These norms and rules should be followed, however, caution is required as national rules in countries to which the product is sold may replace above mentioned norms.

In case of boiler assembly outside Poland, rules and norms should be followed according to solid fuel boiler assembly in countries in which the boiler is sold.

Gasification boilers ORLIGNO 200 are adjusted for installations in pressurized systems.

1. Boiler room height should be at least >2,2 m for easier boiler cleaning.
2. Distance from boiler room walls should allow for free access to boiler sides and should be at least as shown on picture „ORLIGNO 200 placement".
3. Boiler room should be free of any electric installation not intended for boiler installation.

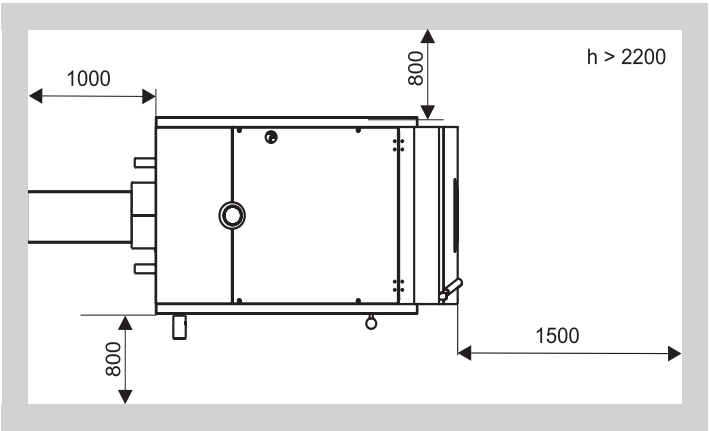

Pic.1 *ORLIGNO 200 placement.*

1.1. Boiler-room ventilation.

According to european safety regulations each boiler room should have supply-exhaust ventilation ensuring correct boiler operation and user's safety . Lack of ventilation or its obstruction is the main reason of incorrect boiler operation (i.e. boiler cannot reach set temperature).Exhaust ventilation removes from boiler room used air and harmful gases. Boiler room with natural draught cannot have installed mechanical ventilation.

1.2. Supply air ventilation.

1. Ventilating duct section should have at least 50% area of chimney's section and not less than 20 x 20 cm. Duct should be placed 1m above the floor.
2. Ventilating duct should have installed device for air flow control; device shouldn't limit duct section above 1/5.Ventilating duct should be made of non-inflammable material.

1.3. Exhaust ventilation

1. Exhaust duct should be made of bricks with section of at least 25% of chimney section not less 14 x 14 cm. Inlet hole cannot have any devices that reduce its section. Outlet hole should be placed close to the ceiling led out 1,5 m above the roof. Ventilating duct should be made of non-inflammable material.
2. Height of the boiler room min. 2,2 m.

1.4. Chimney connection

Chimney ducts should be installed according to binding rules and norms in countries to which boilers are sold. Part of chimney system connection boiler with chimney is called flue. In order to lower flow resistance of exhaust gases this part should lead as a straight pipe with, if necessary, joints up to 45°.

Because of exhaust gases temperature ORLIGNO 200's need to be connected to chimney system protected against condensate soaking.

30 cm above the floor closing door should be installed with tight closing.

Chimney section should be round or close to square shape because of low flow resistance.

Minimal flue diameter should be:

ORLIGNO 200 18, 25, 40 kW - 200 mm

ORLIGNO 200 60, 80 kW - 210 mm

Chimney should lead above the roof. Chimney outlet location is dependent on roof slope and its combustibility.

Eko-Vimar Orlański Ltd. recommends to install draught regulator which stabilizes chimney draught.

2. Technical data

2.1. EKOSTER 2 – technical data

1. Temperatures range	-9 °C +99 °C	
2. Temperatures settings	+60 °C do +97 °C	
3. Pump temperatures range	+65 °C do +90 °C	
4. Blow-through settings	work time	0-90 seconds
	pause	1-15 minutes
	Blow-through turn off	P-0
5. Hysteresis	od 2 °C do 9 °C	
6. Input power:	fan	100 W
	pump	100 W
7. Voltage AC	230 V AC, 50 Hz	
8. Input volatge	275 VA	
9. Fan power in percentages % x 10	(setting range 30 % to 100 %)	
10. Relative air temperature	≤95 %	
11. Protection class	IP 40	
12. Insulation class	I	
13. Ambient temperature	0-40 °C	
14. Disconnection type	full	
15. Electric protection	2 x 1.25 A (fusible)	

2.2. EKOSTER 2 – installation recommendations

1. Controller is adjusted to cooperate with solid fuel boilers.
2. Controller must be installed by qualified person.
3. Controller cannot work at temperatures higher than 40°C.
4. Controller should be protected against water flooding and steam condensation.
5. Controller should be installed and used according to handling rules with electric equipment.
6. Fuse burning as a result of wrong pump connection is not considered as a warranty matter.
7. It is recommended to check controller's settings before lightning up of the boiler.
8. Controller is equipped with two 1,25 A fuses

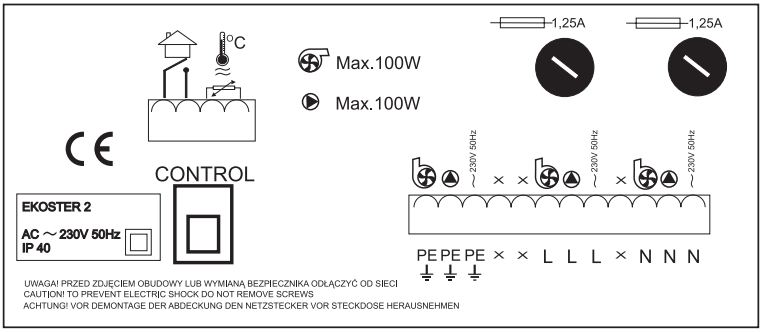

Pic.2 *Ekoster 2 – back panel view.*

ATTENTION!
It is necessary to unplug controller when pump wires connection or fuse replacement.

2.3. EKOSTER 2 – electric scheme.

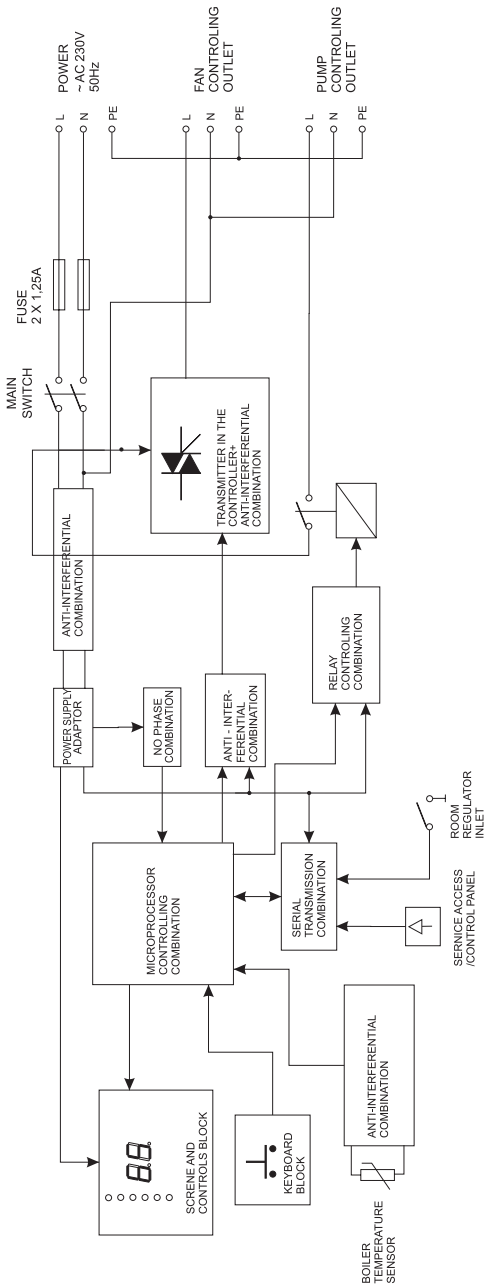

2.4. Boiler dimensions.

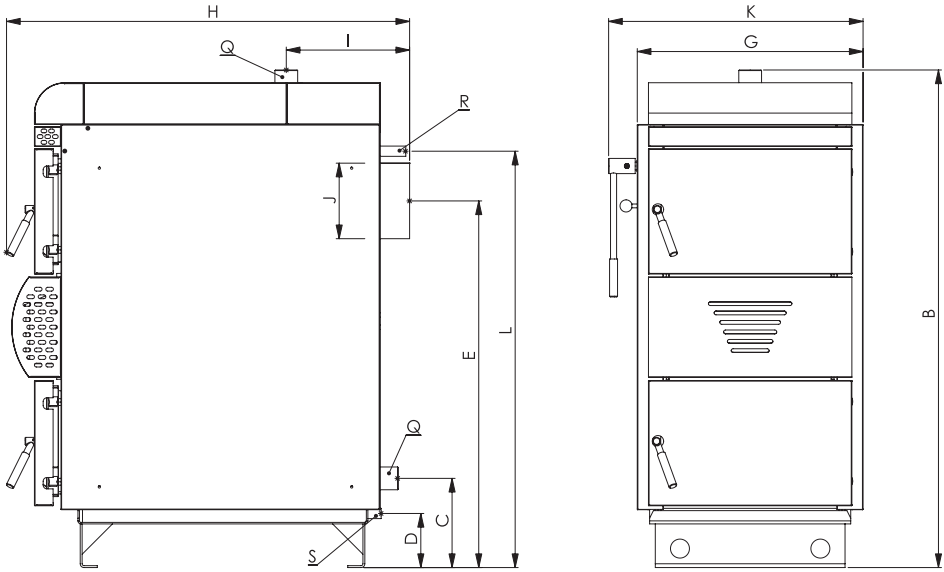

2.5. Technical data of the boiler.

Nominal power output	kW	18	25	40	60	80
Hot water outlet (overall height)	B- mm	1315	1315	1575	1555	1555
Return water inlet	C- mm	230	230	220	200	200
Drain valve height	D- mm	140	140	140	140	140
Flue height	E- mm	960	960	1210	1160	1170
Casing width	G - mm	600	600	600	740	740
Overall lenght	H - mm	1060	1060	1040	1360	1720
Hot water outlet	I - mm	320	320	310	580	610
Flue diameter	J - mm	200	200	200	210	210
Overall width	K - mm	670	670	670	810	810
Cooling coil tappings (height)	L- mm	1100	1100	1330	1310	1300
Hot and return water diameter	Q - inch	2″	2″	2″	2″	2″
Cooling coil diameter	R - inch	3/4″	3/4″	3/4″	3/4″	3/4″
Drain valve diameter	S - inch	1/2″	1/2″	1/2″	1/2″	1/2″

Main construction parameters' listing

Power	kW	18	25	40	60	80
Power range	kW	7-18	10-25	16-40	24-60	32-80
Efficiency	%	91				
Boiler class (EN 303-5)		3				
Boiler weight	kg	546	546	634	1037	1242
Water capacity	dm^3	75	75	93	180	205
	l	75	75	93	180	205
Volume of loading chamber	dm^3	120	120	185	310	465
	l	120	120	185	310	465
Loading hole width/lenght	mm	260/432	260/432	260/432	285/580	285/580
Burning period	h	7-12				
Wood logs lenght	cm	50	50	50	75	100
Humidity - recommended	%	15-25				
Power range for every kind of fuel: Billets	kW	7-18	10-25	16-40	24-60	32-80
Fuel usage for power: - nominal	kg/h	6,8	8,2	10,1	15,1	19,8
- minimal		3,9	5,7	7,9	11,9	15,8
Max working pressure	bar	3				
Minimal return water temperature	°C	60				
Flow resistance - t = 20 K	mbar	1,2	1,4	1,6	1,7	1,6
- t = 10 K	mbar	4,0	4,3	4,9	4,9	4,8
Temperatures setting range	°C	60-97				
Protection level of controller		IP 40				
Voltage/Frequency	V/Hz	230/50				
Auxiliary power	W	50	50	50	100	100
Exhaust gases parameters (at nominal power): - temperature	°C	160	160	160	160	160
- stream	kg/s	0,0066	0,0088	0,0144	0,0216	0,0272
Exhaust gases parameters (at minimal power): - temperature	°C	160	160	160	160	160
- stream	kg/s	<0,0066	<0,0088	<0,0144	<0,0216	<0,0272
Required chimney draft	mbar	0,15-0,20				
	Pa	15-20				
Min water pressure in cooling coil	bar	2				
Cooling coil water temperature	°C	10				
Recommended capacity of accumulation tank	l	750-1500	1000-2000	2000-3000	3000-4000	4000-5000

3. Connection of the boiler.

Necessary part of gasification boiler installation is four way mixing valve (if boiler is connected without accumulation tank). Hot water supplied from boiler is mixed with return water from installation in four way valve in order to avoid „cold return" and keep stable, high temperature in the boiler – at the same time temperature of water feeding heating installation is high enough to maintain comfort conditions in rooms. Valves can be installed in open or pressurized systems.

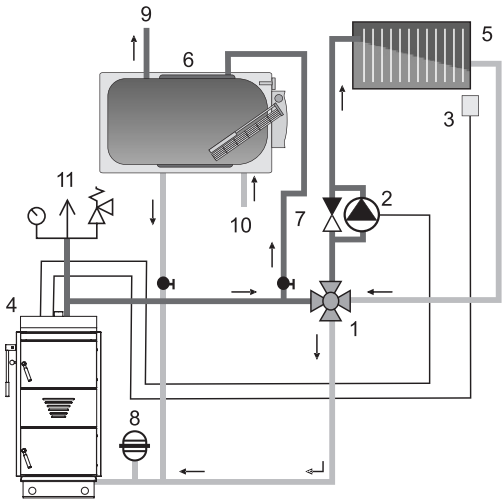

1. Four way mxing valve,
2. Circulation pump
3. Room thermostat
4. ORLIGNO boiler with Ekoster 2
5. Radiator
6. Water heater
7. Differential valve
8. Pressurized vessel
9. Hot water outlet
10. Cold water inlet
11. Safety group

Pic.3 *Connection scheme of ORLIGNO boiler with four way mixing valve and water heater.*

3.1. Accumulation

The most effective way of utilizing gasification process is boiler installation with accumulation tank.

Such a installation allows to decrease fuel usage for about 40%. Gasification process (if proceeds in optimal way) generates huge amount of wood gases, while demand for heat from heating system is changeable.

Gasification process is only to some degree controlled, fluctuation in heating system are much more dynamic – possibility to overheat rooms or removal of extra heat (exhaust gases) through the chimney. Installation with accumulation tank allows to collect whole created gas (after burning) in form of heat in the tank. Heating system is feed with accumulation tank for up to 48 h(depends on accumulation tank capacity and thermal conditions – on the assumption that 1 kw of installed power = 55 litres of water in tank .

Boiler installation with accumulation tank allows to prolong boiler lifespan.

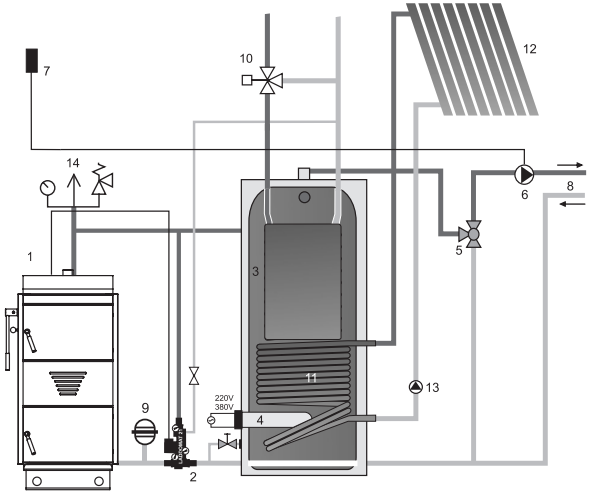

1. ORLIGNO boiler with EKOSTER 2 controller
2. Thermoregulator
3. Accumulation tank
4. Heater
5. Three-way mixing valve
6. Circulation pump
7. Room thermostat
8. Outlet for heating installation
9. Pressurized vessel
10. h.d.w mixing valve
11. Coil
12. Solar collector
13. Solar pump
14. Safety group

Pic.4 *Connection scheme of accumulation tank type NADO with solar collectors.*

3.2. Boiler thermal protection.

In connection with thermostatic valve BVTS it protects the boiler from overheating. Cooling coil needs to be connected to cold water installation through thermostatic valve BVTS. Cooling coil outlet should be directed to drains. Cooling coil tappings are located at the back of the boiler.

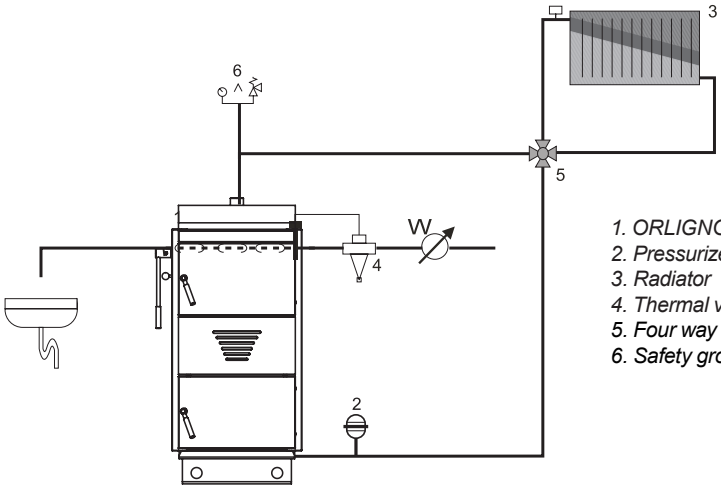

1. ORLIGNO Boiler
2. Pressurized vessel
3. Radiator
4. Thermal valve ex. BVTS
5. Four way mixing valve
6. Safety group

Pic.5 *Safety valve - BVTS connection to the boiler.*

4. Troubleshooting

Symptom	Reason	Action
Boiler cannot reach set temperature	Wrong lightning up	Check. 5.1 „Lightning up"
	Too humid wood	Humidity control – use wood with proper parameters
	Clogged primary air channels	Call service – after warranty service
	Clogged secondary air pipes	Call service – after warranty service
	Polluted heat exchanger's pipes	Call service – after warranty service
	Unproper mix of air with wood gases	Call service – after warranty service
	Damaged nozzle	Replace – after warranty service
	Smoking from fan gasket	Replace – after warranty service
	Damaged fan	Replace – after warranty service
Smoking from loading door	Strong wind force exhaust gases into the chimney	Consider installation of appliances supporting chimney draft (WKO)
	Unproper chimney parameters	Rebuild chimney, chimneys weeper assistance
Smoking from door	Leakiness from door	Door adjustment according to 6.3.
	Used rope - leak	Rope replacement or call service - after warranty service
	Damaged door	Door replacement
Controller doesn't work	No voltage in the grid	Check electric installation
	Damaged fuse	Fuse replacement
	Damaged wire	Wire control or replacement
	Damaged boiler sensor	Call service
	Damaged controller	Call service
Fan doesn't work	Damaged fan	Fan replacement – call service
	Fan blades blocked	Check and clean fan
Loud work of fan	Damaged bearings	Call service- fan replacement
	Damaged condenser	Call service – condenser replacement
	Loosen fixing of fan	Fixing control, screw in
	Polluted fan blades	Control, cleaning
	Pitch in fan casing	Control, cleaning
Weak work of fan	Polluted fan blades	Control,cleaning
	Fan flap clogged with pitch	Clean or call service
Explosions In boiler	Wrong lightning up	Check 5.1 "Lightning up"
	Too low chimney draft (below 10 Pa)	Rebuild chimney. Install exhaust fan WKO
	Too big chimney draft (above 20 Pa)	Install draft stabilizer
	Too dry wood (humidity below 15 %)	Mix with wood with higher humidity content
	Polluted heat exchanger's pipes	Clean pipes or call service

5. Ending

Present appliance is marked according to European Directive 2002/96/EC on waste electrical and electronic equipment.

Symbol placed on the components or attached documents means that appliance is not classified as a household waste.

Scrapping should take place in special collection point in order to reuse electrical and electronic components.

EKO-VIMAR ORLAŃSKI Sp. z o.o.

48-385 Otmuchów, ul. Nyska 17b
POLSKA / woj. opolskie
T +48 77 400 55 80-81, 400 55 91
F +48 77 439 05 03, 400 55 96
E biuro@orlanski.pl

www.orlanski.pl